SALES DRAWING SALES DRAWING SALES DRAWING

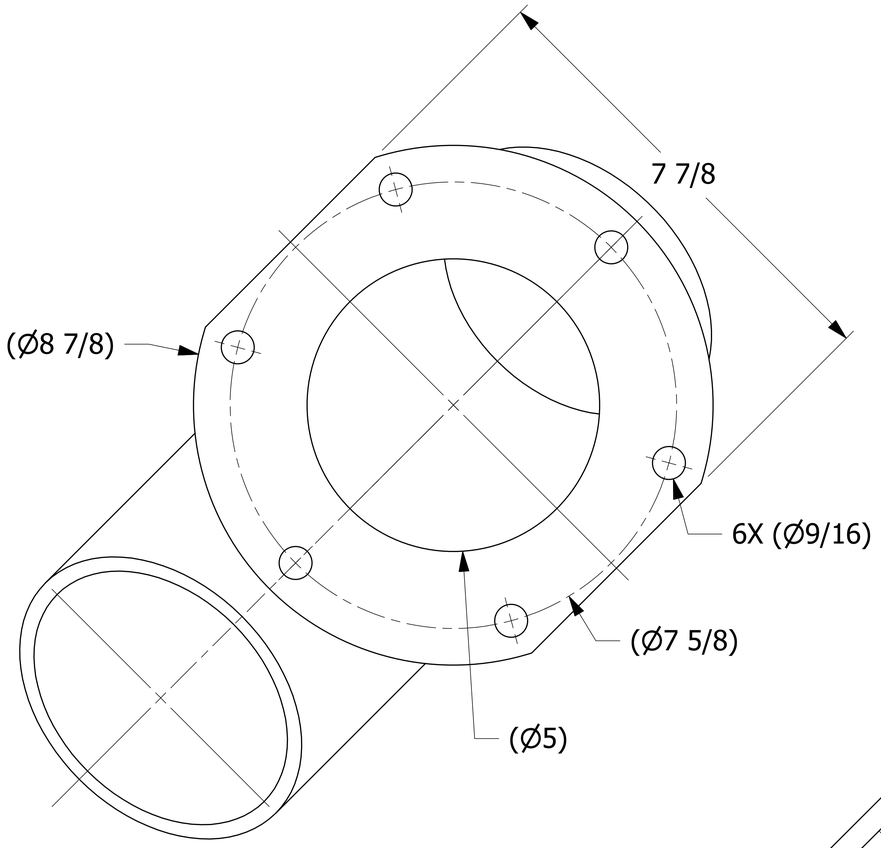

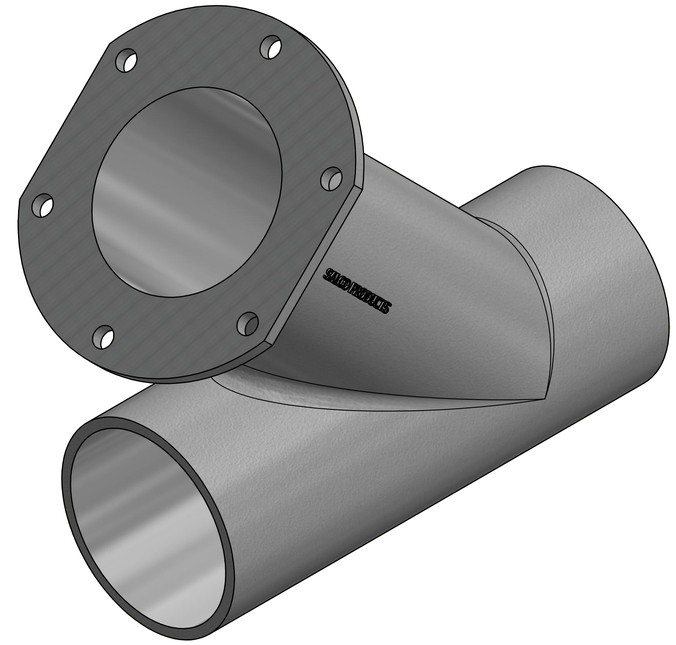

ISOMETRIC VIEW

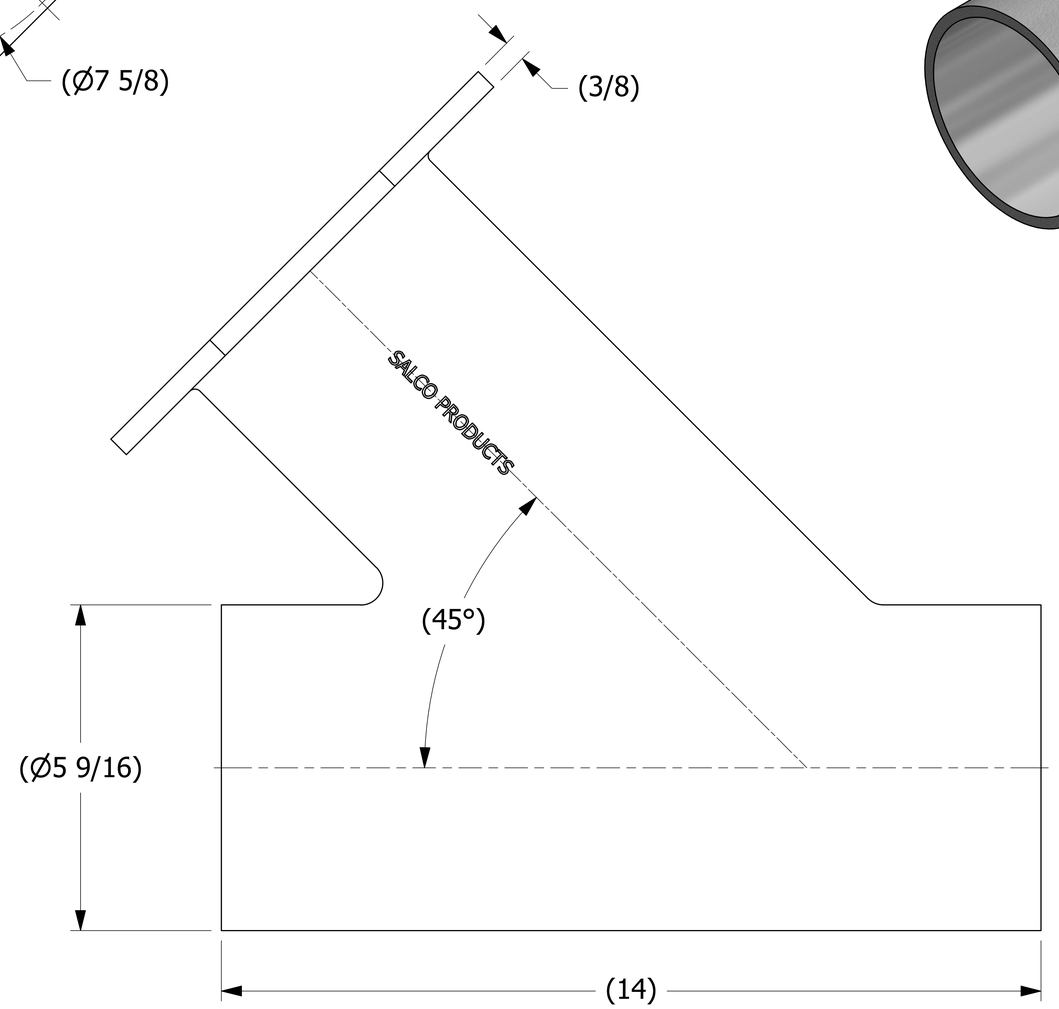

REV	BY	DATE	REF #	
I	TAK	5/16/22	202205161515	TAK
				PUB

UNLESS OTHERWISE SPECIFIED DIMENSIONAL TOLERANCES

FRACTIONAL:	±1/16
X.XX:	±.03
X.XXX:	±.015
ANGULAR:	±1°

DEBURR ALL SHARP EDGES. ALL MACHINED SURFACES TO HAVE A 125 RMS FINISH UNLESS NOTED OTHERWISE.

THIRD ANGLE PROJECTION

DRAWN BY:	ACC
CHECKED BY:	
PROTOTYPE DATE:	2/17/2006
APPROVED FOR PRODUCTION BY:	ACC
PRODUCTION DATE:	9/12/2001
SIZE:	E
DRAWING #:	15946

SALCO PRODUCTS, INC.

PART NAME: DISCHARGE LATERAL 5"

MATERIAL: ASTM B26 356.0-T6 ALUMINUM

PROJECT #: 001001 | SHEET #: 1 OF 1 | SCALE: 1:1

PART #: PD5ADL01

THIS PRINT, PROPERTY OF SALCO PRODUCTS INC, CONTAINS PROPRIETARY INFORMATION AND MUST NOT BE COPIED, REPRODUCED, OR USED DETRIMENTALLY TO OUR INTEREST.